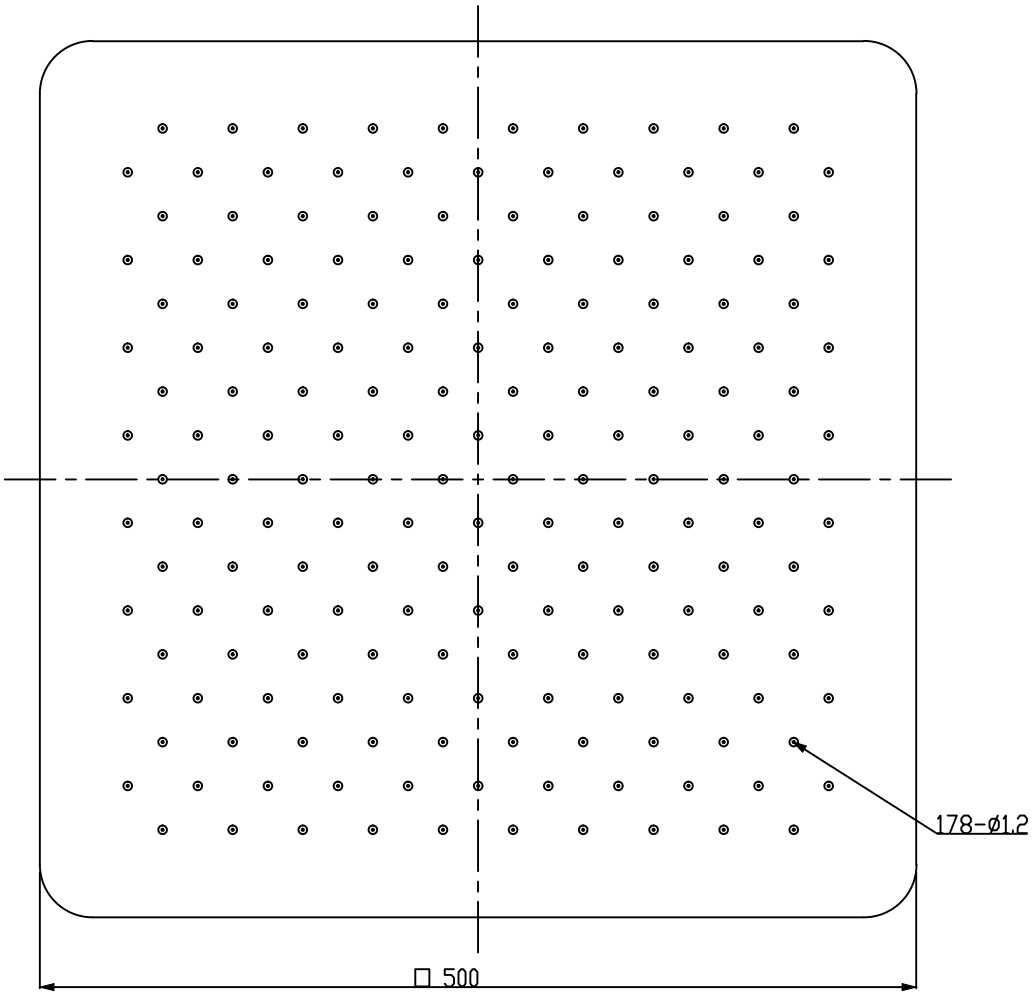
178-ø1.2
□ 500

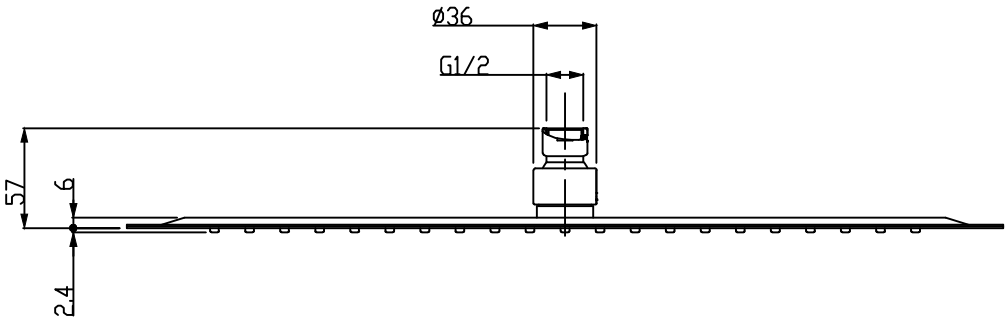
ø36
G1/2
57
6
2.4